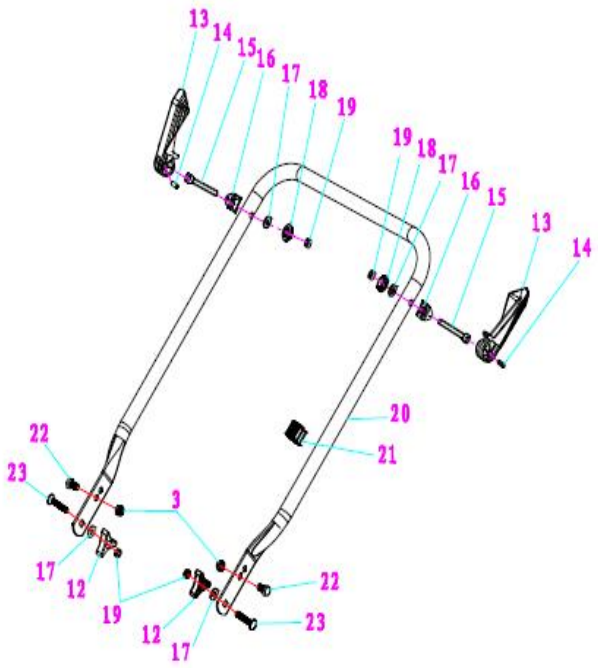

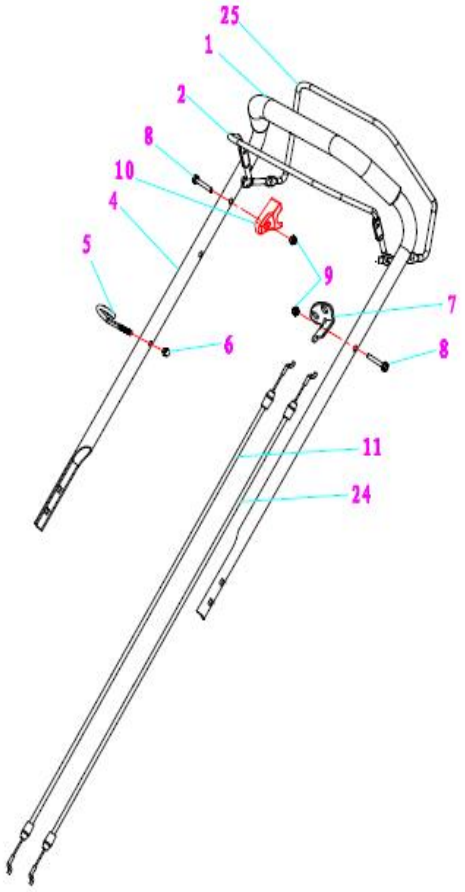

1	20340060130	foam pipe	1
2	70540083830	stop lever	1
3	60150020000	Hex lock nut	2
4	70500550031	upper handrail	1
5	70230090000	Rope Guide	1
6	60130020000	Cap nut	1
7	70050120000	Brake Cable Assy plate	1
8	60060590000	Bolt	2
9	60150080000	Self-locking nut	2
10	20030030000	Plastic stopper	1
11	70810050000	brake cable	1
12	20040050830	triangle knob	2
13	20580020830	quick fix knob	2
14	60250080000	Pin	2
15	70220020000	Quick Fix Handle	2
16	70050180000	lock for fast fix handle	2
17	60190140000	flat washer	4
18	20720010830	lock nut	2
19	60140080000	Hexagon nut	4
20	70520210031	lower handrail	1
21	20240010000	fastener	1

22	60060420000	Hexagon head bolts	2
23	60040090000	Half round head square neck bolts	2
24	70780080000	selfpropelled cable	1
25	70550073130	Self-propelled Lever	1

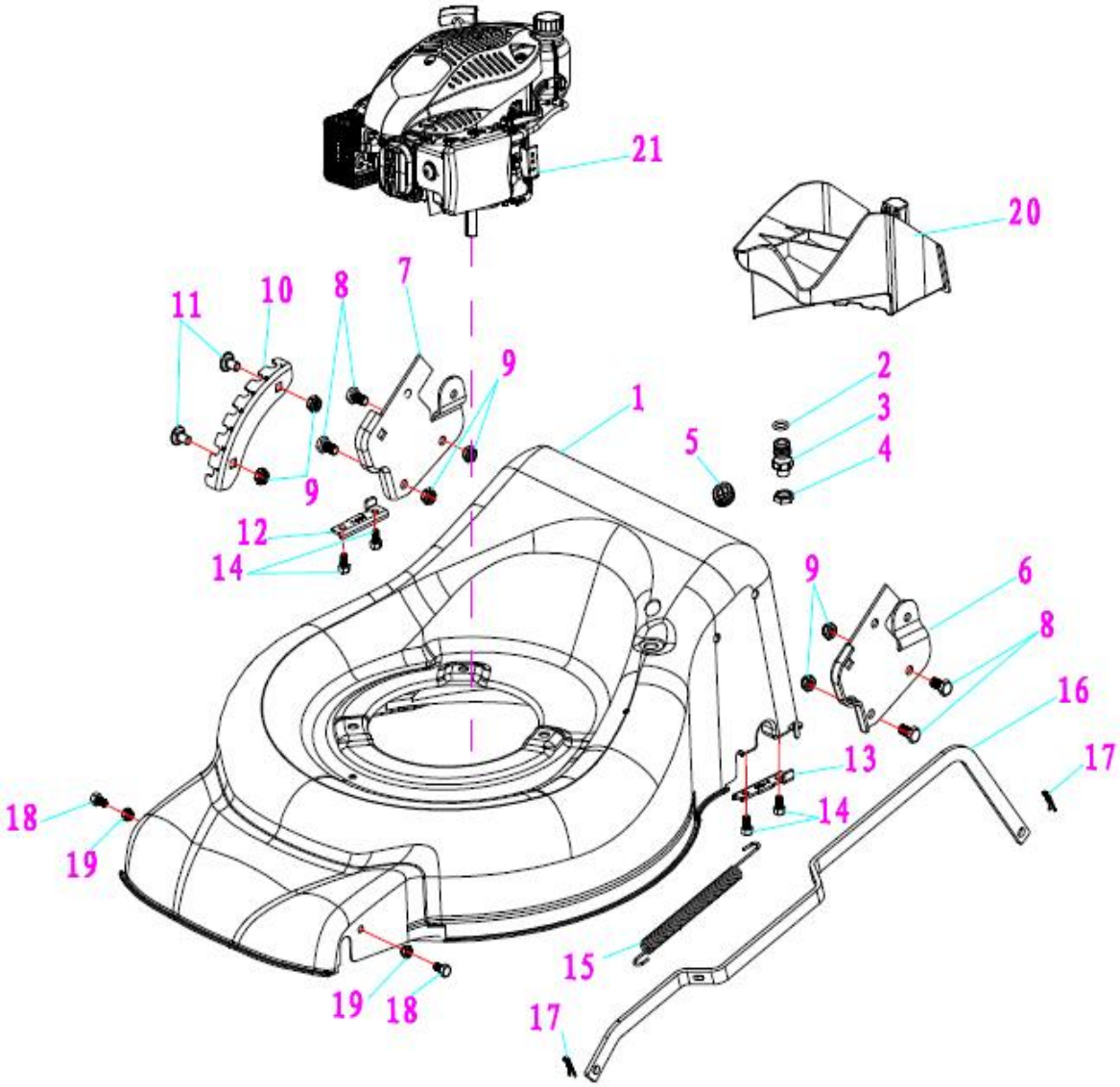

1	70740661130	deck welding assy.	1
2	60370020000	"O" ring	1
3	20460010000	inlet	1
4	60160010000	Pipe connector nut	1
5	20590020000	cable stopper	1
6	70070290000	left handle bracket	1
7	70070300000	left handle bracket	1
8	60060930000	Hexagon head bolts	4
9	60150020000	Hex lock nut	6
10	70250100000	height adjustment board	1
11	60040020000	Half round head square neck bolts	2
12	70290050000	rear drive right bracket	1
13	70290070000	rear drive left bracket	1
14	60170400000	Hex tapping screws	4
15	60410080000	Pull Spring for Pull Rod	1
16	70180270830	Height Adjustment Pull Rod	1
17	60300030000	R type pin	2
18	60060660000	Bolt	2
19	60150080000	Self-locking nut	2
20	20160120000	mulching plug	1

21	19960120000	petrol engine	1

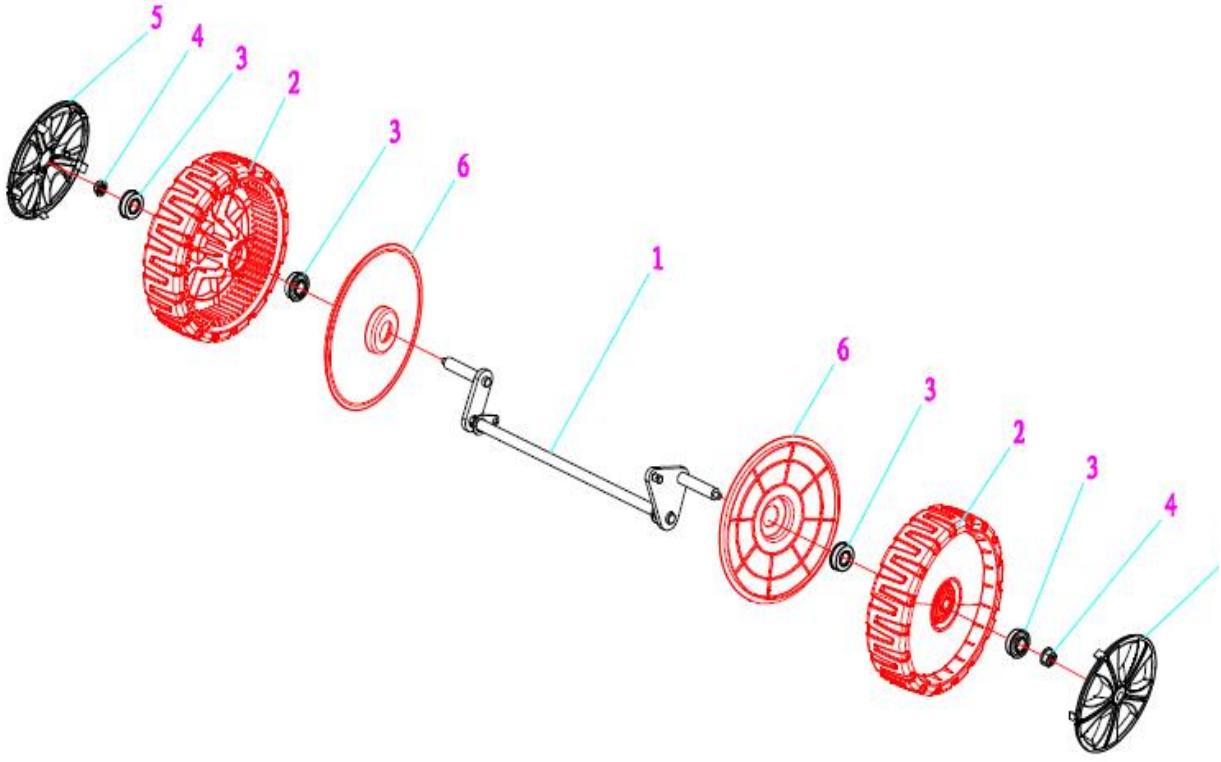

1	70840170000	front drive assy.	1
2	20880300000	wheel assy.	2
3	60010110000	wheel punch bearing	4
4	60150090000	Self-locking nut	2
5	20620200830	outer cover of hub	2
6	20610120000	inner cover of hub	2

5

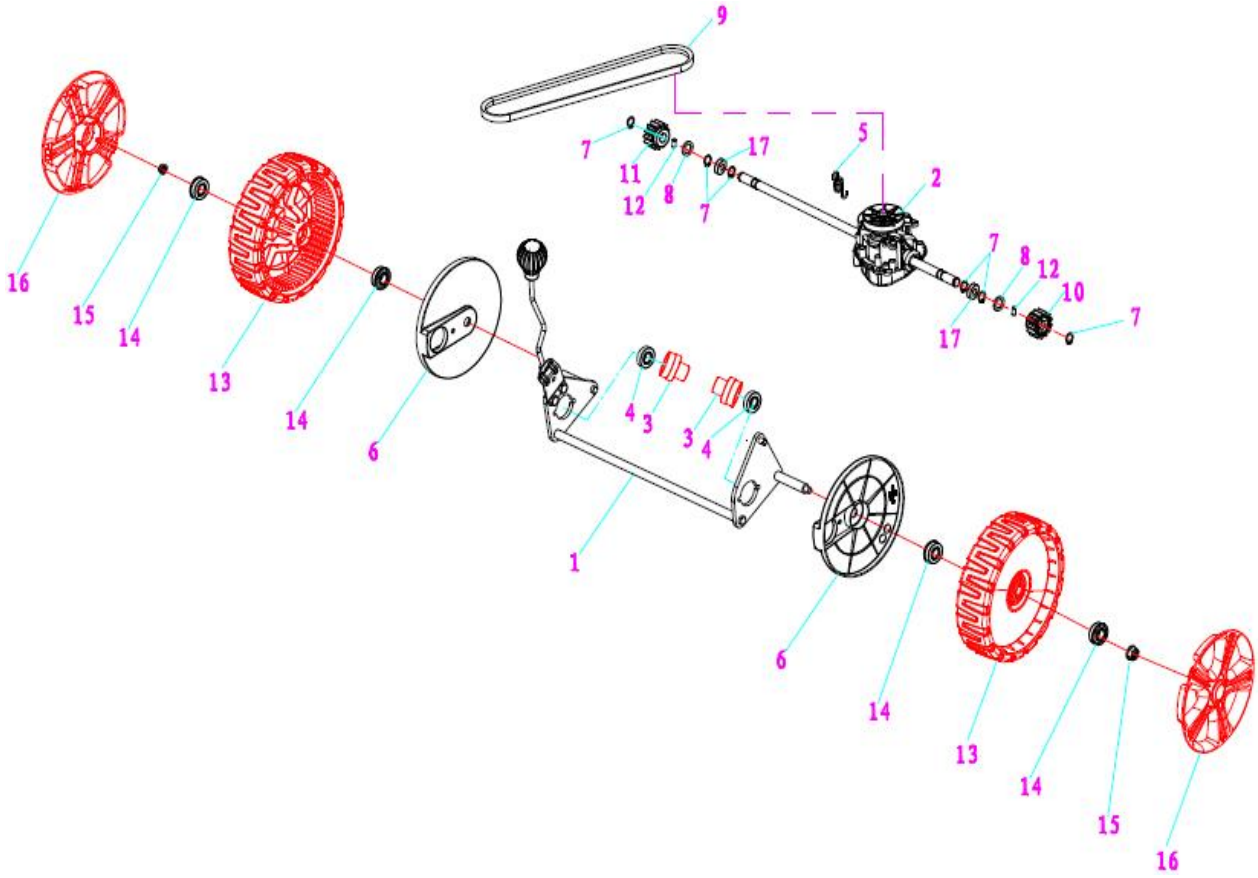

1	70850511000	欧洲矮轮后驱焊接总成	rear drive assy.	1
	20270010130	调高把手球	height adjustment ball	1
2	70860320000	自走器总成-14	gearbox assy	1
3	70600110000	粉末冶金轴套	crankshaft sleeve	2
4	60020010000	深沟球轴承6001	deep groove ball bearings	2
5	60410430000	自走拉簧	selfpropelled spring	1
6	20610050000	轮毂内盖	inner cover of hub	2
7	60240060000	轴用弹性挡圈	spring washer	6
8	21070030000	自走器棘轮垫片	selfpropelled ratchet washer	2
9	60320210000	普通V带Li=660	v belt	1
10	70300170000	棘轮K左	Ratchet Wheel R	1
11	70300180000	棘轮K右	Ratchet Wheel R	1
12	60290030000	棘轮销17.1	bratchet pin	2
13	20880320000	H型8英寸轮子总成	wheel assy.	2
14	60010110000	轮子冲压轴承	wheel punch bearing	4
15	60150090000	全金属法兰面锁紧螺母 M8	Self-locking nut	2
16	20620210830	轮毂外盖	outer cover of hub	2
17	20430170000	矮轮内盖衬套	rear wheel axle sleeve	2

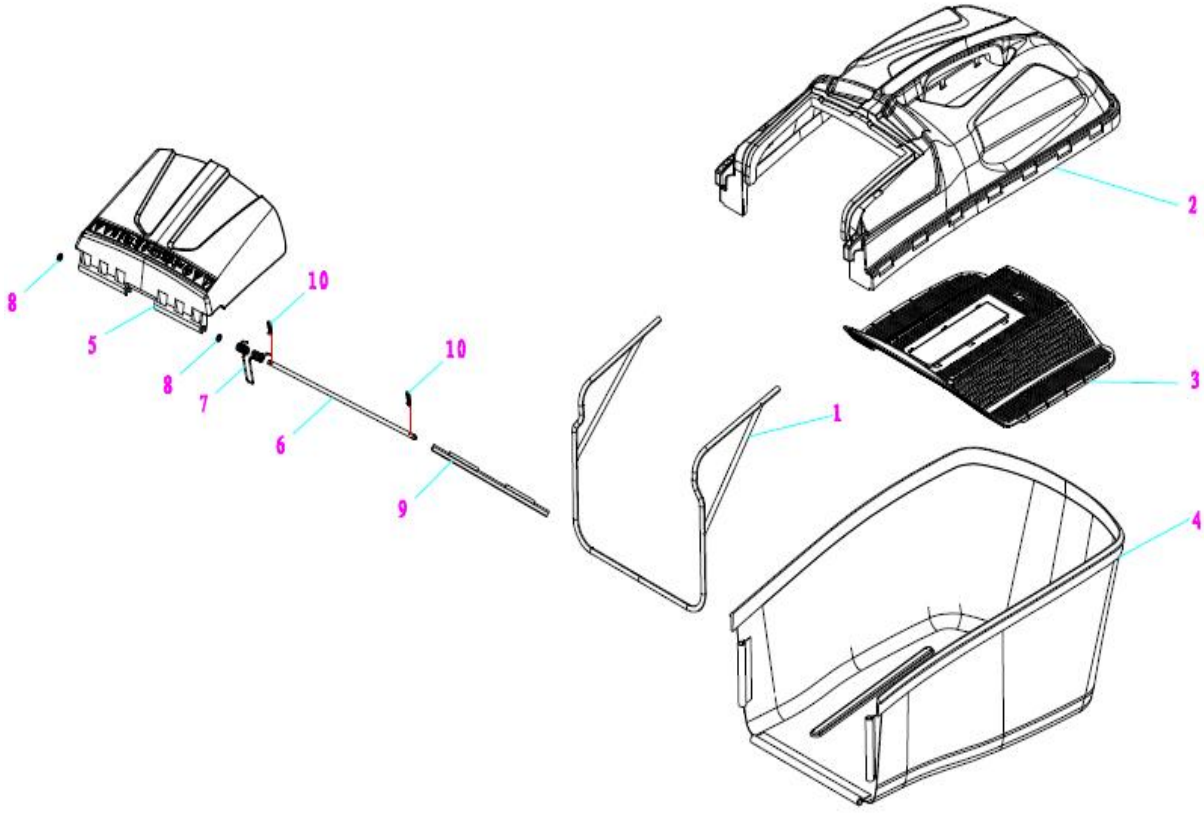

1	70010070000	fabric metal frame	1
2	20080060000	top of grass box	1
3	21010010830	filter plate	1
4	20050080034	fabric grass bag	1
5	20380060000	rear discharge cover	1
6	70030050000	Shaft for rear discharge cover	1
7	60380240000	cover spring	1
8	60220010000	lock washer	2
9	20750070000	rear discharge cover dust proof board	1
10	60300030000	R type pin	2

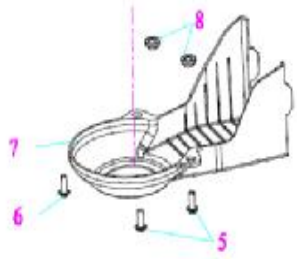

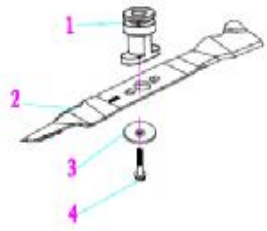

1	70140400000	Blade Adapter Assy	1
2	70130350000	Double-edge blade	1
3	60200240000	blade washer	1
4	60100030000	Inch hex flange bolts	1
5	60060180000	Hex flange bolts	2
6	60060390000	Hexagon head bolts	1
7	20660130000	belt cover	1
8	70150240000	Chassis bushing	2

1	70140400000	Blade Adapter Assy	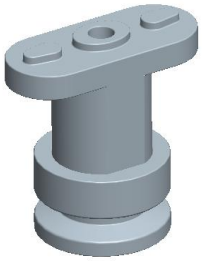
2	70130350000	Double-edge blade	
3	20880320000	wheel assy.	
4	20620210830	outer cover of hub	
5	20880300000	wheel assy.	
6	20620200830	outer cover of hub	

7	60010110000	wheel punch bearing	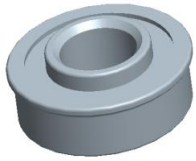
8	20580020830	quick fix knob	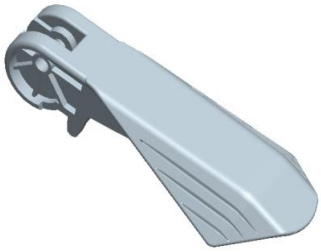
9	60250080000	Pin	
10	70220020000	Quick Fix Handle	
11	60190140000	flat washer	
12	20720010830	lock nut	

13	60140080000	Hexagon nut	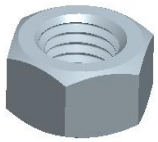
14	20660130000	belt cover	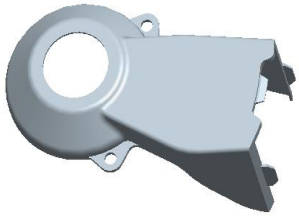
15	60320210000	v belt	